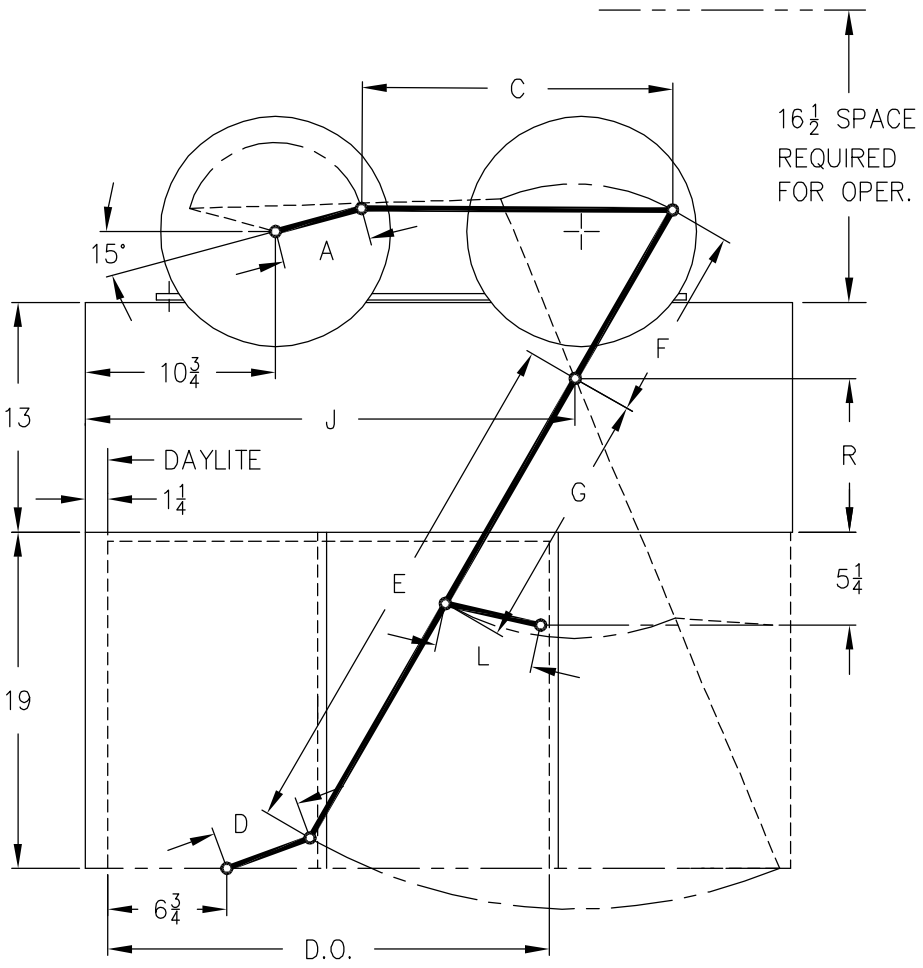

29	6 3/8	20	6	30	12	14 3/4	7 3/4	30 1/4	8
28	6 1/8	20 1/4	6	30	12	14 3/4	6 3/4	30 1/4	8
27	5 15/16	20 7/16	6	30	12	14 3/4	5 3/4	30 1/4	8
26	5 1/8	17 3/8	5	30	11	14 3/4	6 1/2	27 11/16	8 11/16
25	5 1/16	17 5/8	5	30	11	14 3/4	5 1/2	27 11/16	8 11/16
24	4 7/8	17 3/4	5	30	11	14 3/4	4 1/2	27 11/16	8 11/16
DOOR OPENING	A	C	D	E	F	G	L	J	R
	OPERATOR ARMS		DOOR ARMS					PIVOT	

GAL ELEVATOR DEVICES

TWO SPEED 24-29 D.O. OPERATOR DATA TABLE

OCT. 13 1995

DATA 22-6